DIMENSION	TOLERANCE
BELOW 10 mm	± 0.25
10~50 mm	± 0.4
ABOVE 50 mm	± 0.7

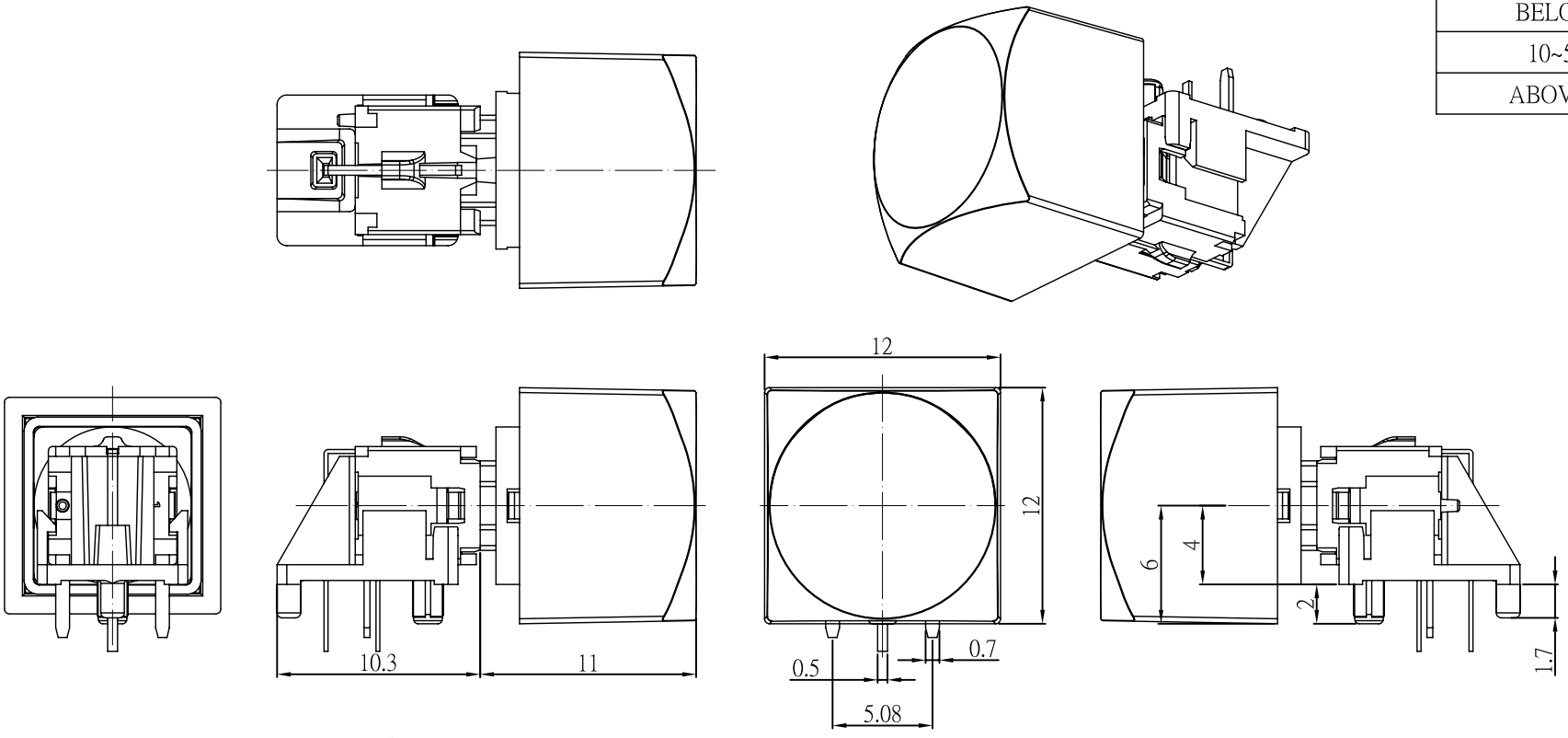

P.C.B LAYOUT

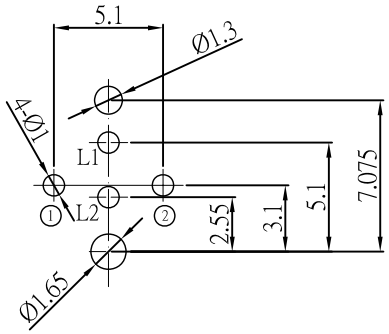

CIRCUIT DIAGRAM

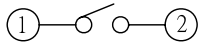

1. RATING : 12 V DC , 50 mA .
2. CONTACT RESISTANCE : 100 mΩ MAX .
3. INSULATION RESISTANCE : 500 V DC , 100MΩ MIN .
4. OPERATION FORCE :180±50gf .
5. OPERATION TEMPERATURE RANGE : -20℃ ~ +70℃ .
6. OPERATION LIFE : 500,000 CYCLES .

BLUE

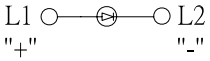

LED CIRCUIT

						UNIT	mm	MODE	TACT WITH LED SWITCH	WWW.SZLAKEVIEW.COM ELECTRONICS CO., LTD	
V0	2016/7/25	JOHNSON	ALEN	MIKE	ORIGINAL DESIGN	SCALE	1 : 1	ANGLE TER	± 3°		
VER	DATE	APPROVAL	CONFIRM	DESIGN	ENGINEERING RECORD DESCRIPTION	PART	TL7-CDS10WT-B1NN			VIEW	PHONE (86)755-29424722/29424733